PW200001428.SchDoc

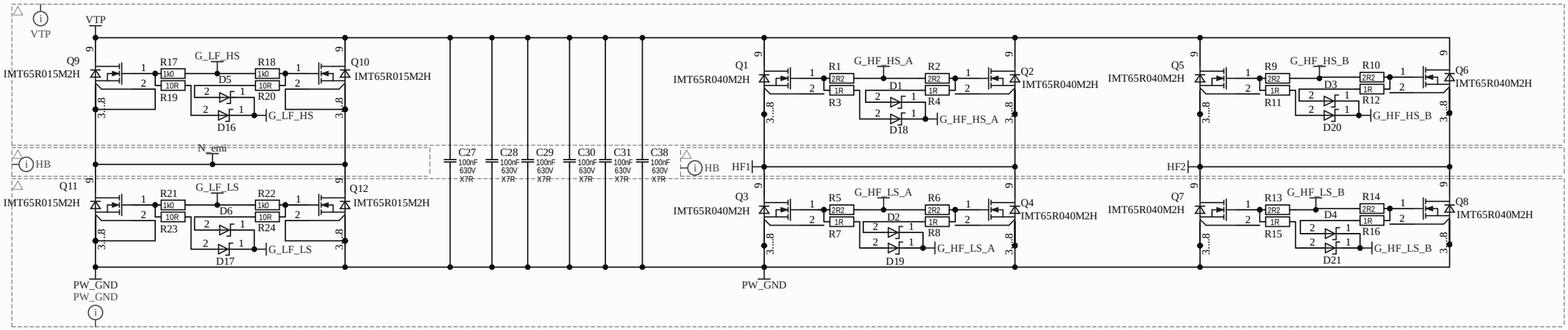

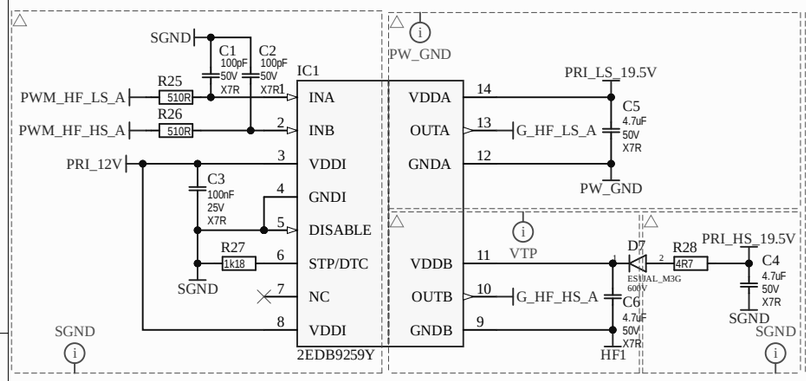

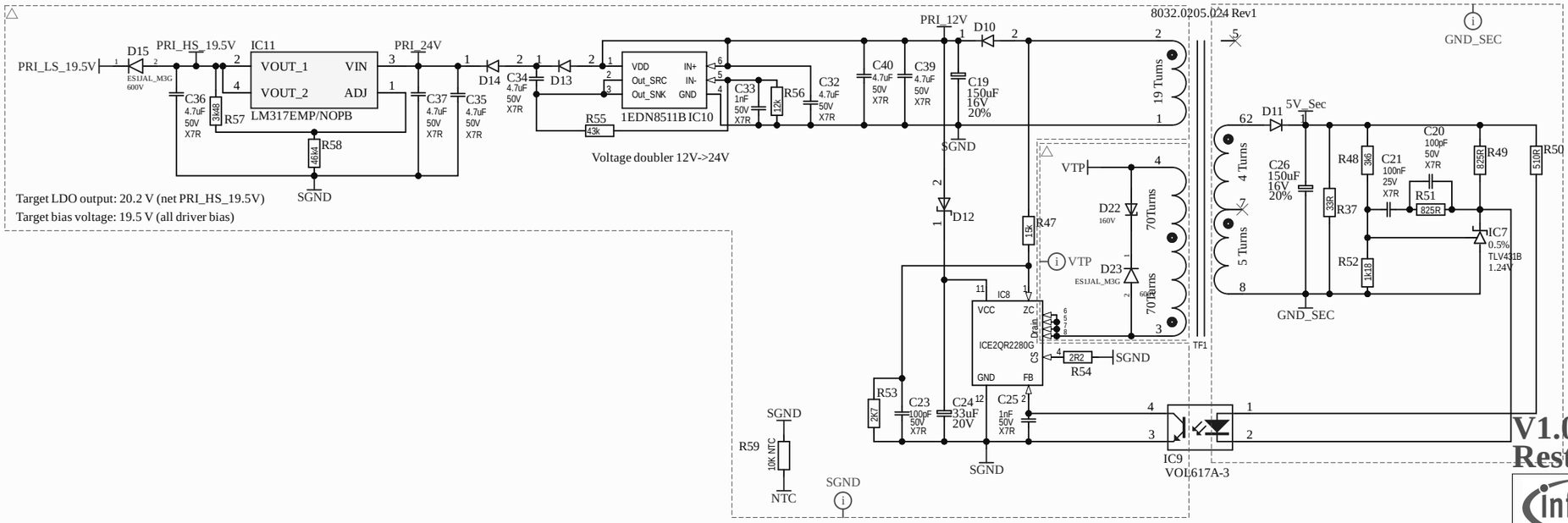

FID1 Fiducial Fiducials
FID2 Fiducial Fiducials
FID3 Fiducial Fiducials

V1.0
Restricted

Infineon Technologies Austria AG assumes no liability for re-use, application, customer product design or infringement of patents related to the present material.
and is not considered by Infineon Technologies Austria AG to be part of a finished end product for general consumer uses.
This Evaluation Board/Kit/Module/Layout is intended for use for ENGINEERING DEVELOPMENT, DEMONSTRATION, OR EVALUATION PURPOSES ONLY

Infineon Technologies AG
PSS SAE
Siemensstraße 2 - 9500 Villach - Österreich

Title	8KW PSU PFC Power card		
Variant	[No Variations]	Approved	SAE
Size: A3	Document Name: PW200001428.SchDoc	Rel.: N/A	Rev.: 1.0
Author: SAE			
Date: 28.11.2024 Time: 13:55:53	SVN Revision: Version control disabled		

© Infineon Technologies AG 2016. All Rights Reserved.

Sheet of